Computer Aided Design
Code & Design Consultant
ARCHITECT – PLANNER – INSPECTOR
#5133 #5133
Ph (863)763-1600 Fax (863)763-3242
RON UPHOFF
107 SW 17th Street – Suite H
Okeechobee, Florida 34974

R.M. ENTERPRISES
"TIE DOWN STRAPS"

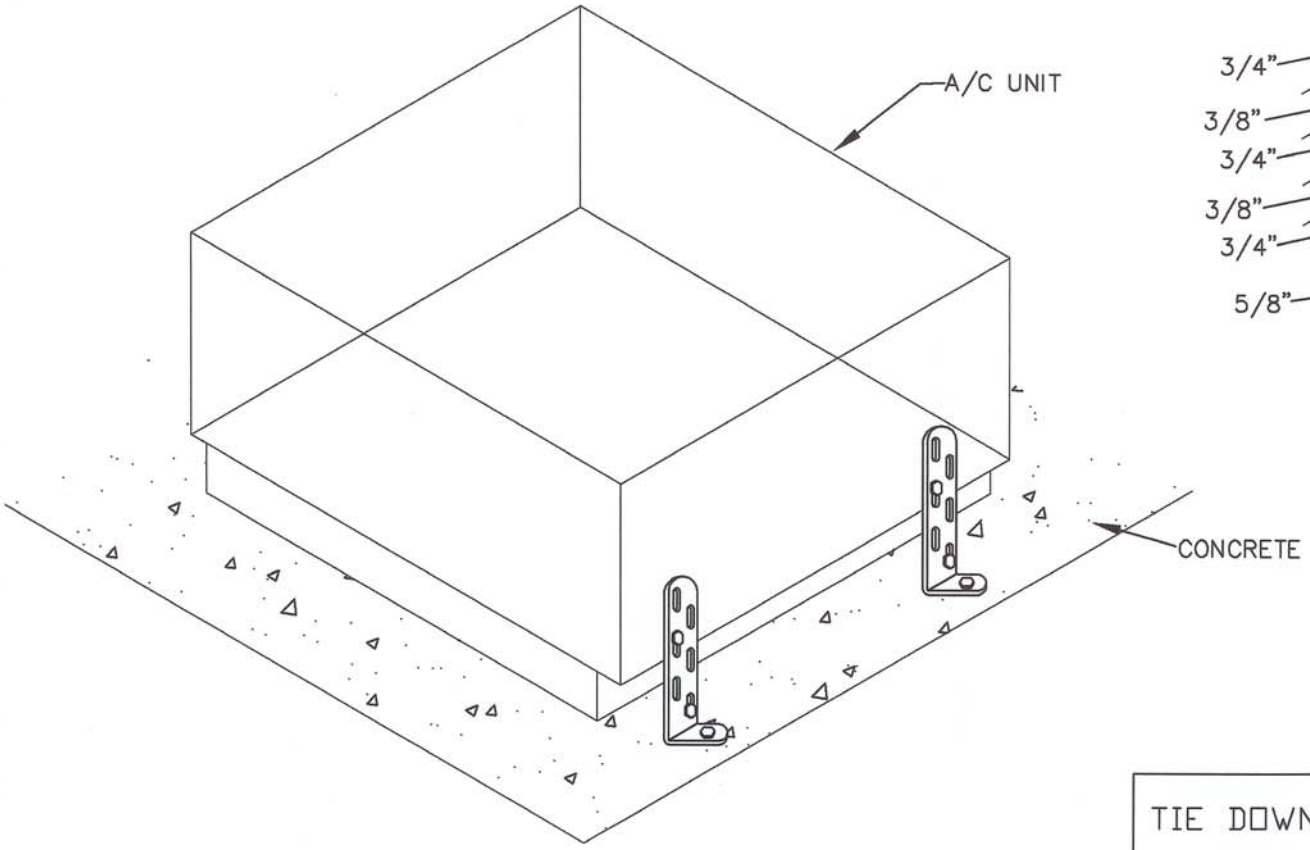

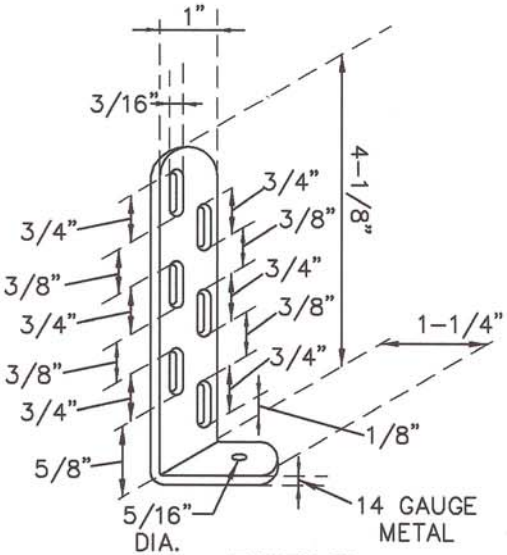

DETAIL
NOT TO SCALE

TIE DOWN STRAPS		
RM ENTERPRISES 352 TALL PINES ROAD WEST PALM BEACH, FL.		Drawn By: JHM
Date: August 14, 2003	Not to Scale	Sheet 1 of 1